GSM/GPRS Communication Board

Compact embedded communication module integrating LTE Cat-1 connectivity and GNSS positioning, designed for reliable operation in embedded and field-deployable systems.

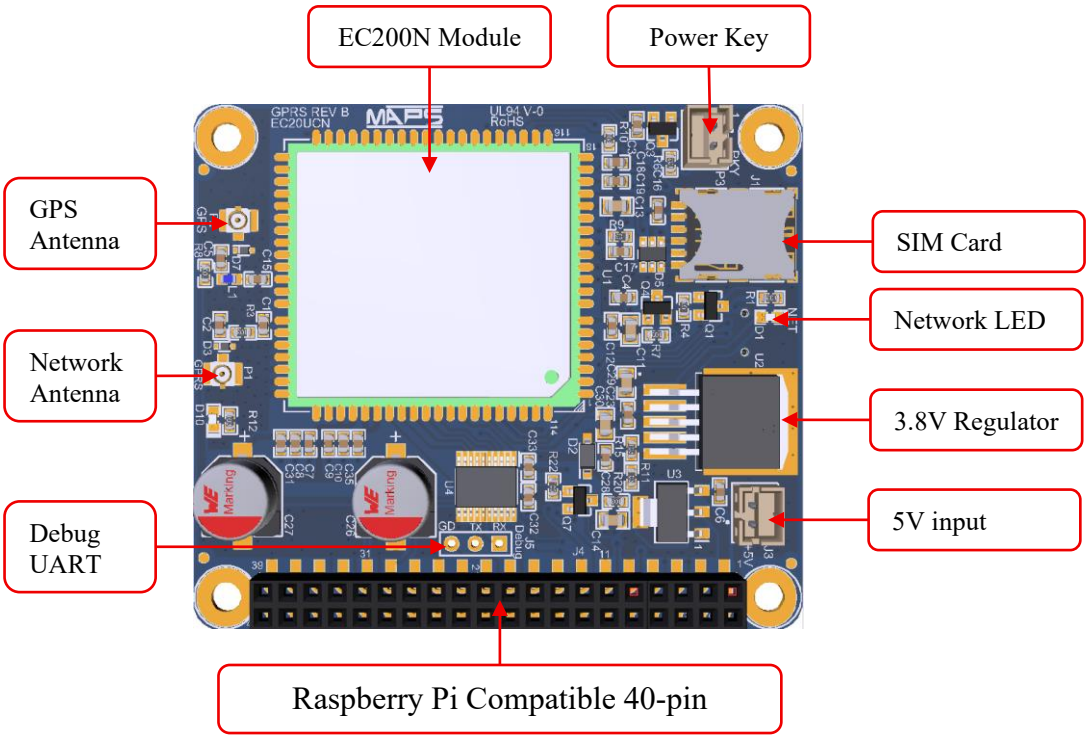

Key Highlights

- **LTE Cat-1 + GNSS integrated module**
- **Multiple power input options**
- **3.3V TTL UART interface for communication**
- **Raspberry Pi compatible 40-pin header**
- **Compact 56 × 65 mm form factor**

Electrical & Power

- Input Supply: 5V
- Onboard Regulation: 3.8V regulator for module operation
- Power Options
  - 2-pin connector
  - USB Micro-B
  - 40-pin header (RP compatible)

UART Communication

- 3.3V TTL level
- Baud rate up to 921600 bps, Default 115200 bps
- Dedicated debug UART (3.3V)

SIM Card

- 6-pin Nano SIM support

Wireless & Positioning

- LTE Cat-1 module (EC200N-CN)
- Backward compatible with 2G / 3G / 4G
- Integrated GNSS positioning

Mechanical & Integration

- Compact 56 × 65 mm form factor
- Suitable for compact embedded applications

Typical Applications

- Remote monitoring systems
- Industrial IoT devices
- GPS-enabled tracking systems

Design & Customization Support

- Complete design files (schematics, Gerber, and assembly data) can be shared on request
- Supports customization and design adaptation for specific applications